SEE TYPE V SHEET FOR DETAILED INFORMATION

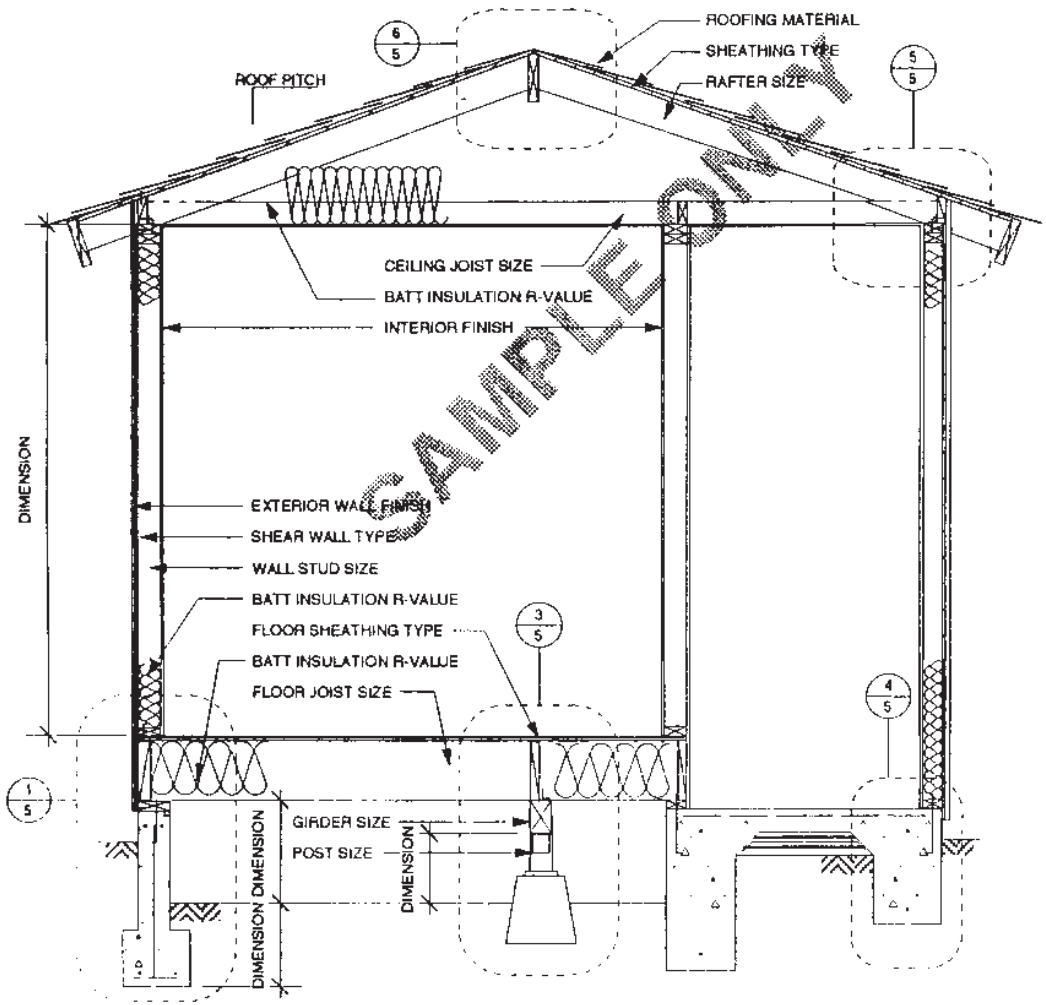

A SECTION
SCALE

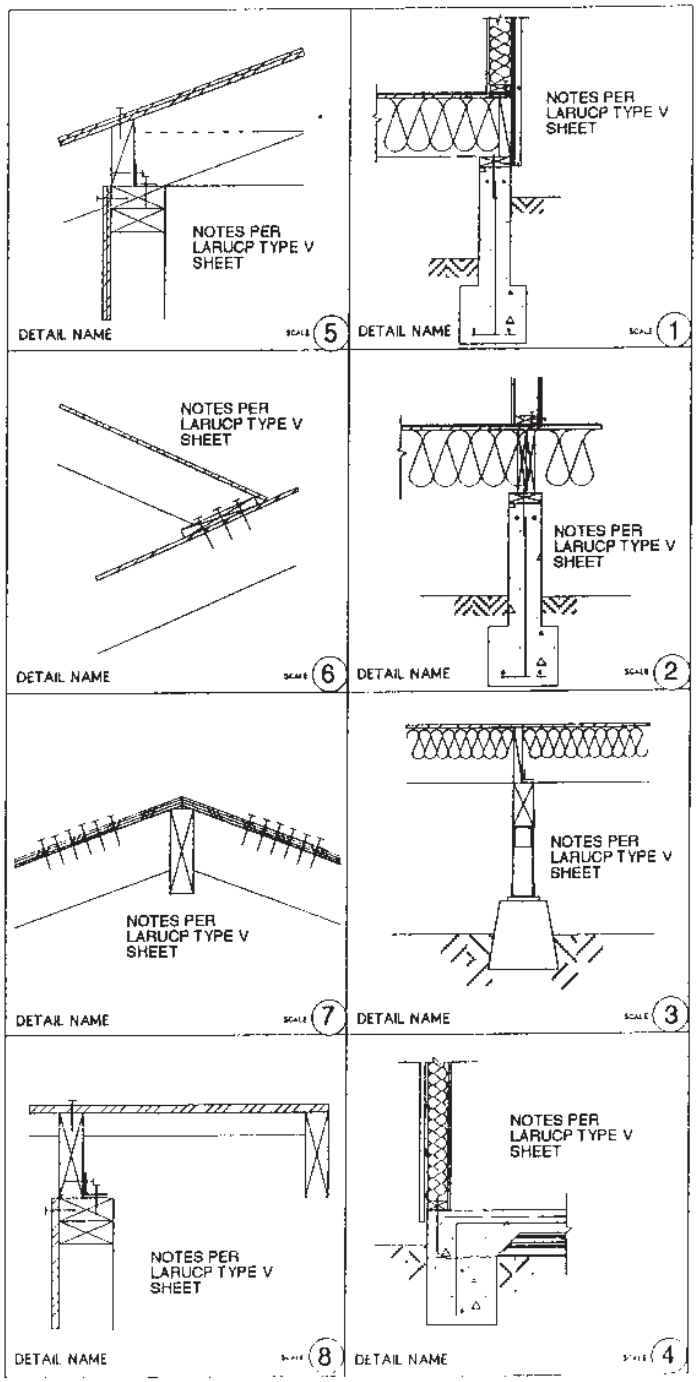

ARCHITECT OR ENGINEER'S STAMP IF APPLICABLE

ARCHITECT:
ENGINEER:
ADDRESS:
CITY:
PHONE:

OWNER'S NAME
OWNER'S ADDRESS
OWNER'S PHONE NUMBER

PROJECT NAME
PROJECT ADDRESS

DETAILS

DATE

SHEET NUMBER